5765210033 HANSALOFT - Spout, L=197

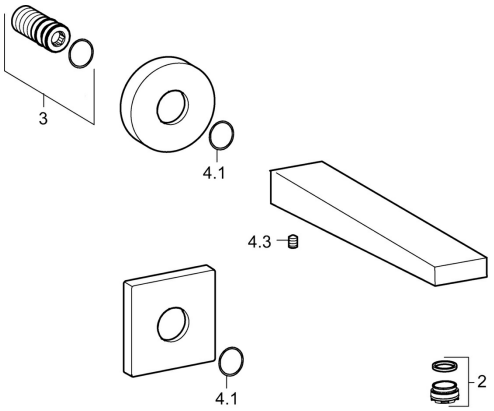

EAN: 4057304015717
static.hansa.com/5765210033

Spare parts

SP5765210033

	Name	Code
2	Aerator, M24x1	59913132
2.2	Key for aerator, M24x1	59913134
3	Thread nipple	59913658
4.1	O-ring, d 26x2	59913423
4.3	Screw, M5x6, SW2.5	59912617

© 2024 Hansa Armaturen GmbH - www.hansa.com - 16.04.2024