57649583 HANSALOFT - Cover part for bath and shower faucet

EAN: 4057304014802
static.hansa.com/57649583

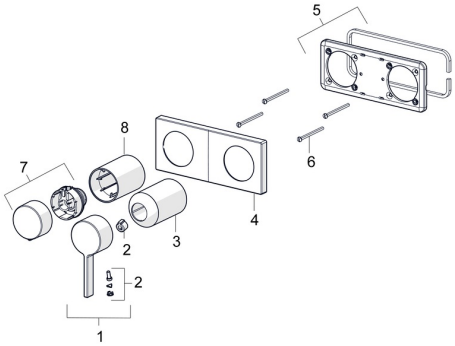

Spare parts

SP57649583

	Name	Code
01	Lever Chrome	1003930V
02	Symbol plug	59914573
03	Cover sleeve Chrome	59914572
04	Cover plate Chrome	59914702
05	Cover plate holder	59913697
06	Screw, M4x55	59913698
07	Flow control handle Chrome Discontinued	59914703
08	Cover sleeve Chrome	59914671

© 2024 Hansa Armaturen GmbH - www.hansa.com - 16.04.2024