51052173 HANSADESIGNO - Washbasin faucet

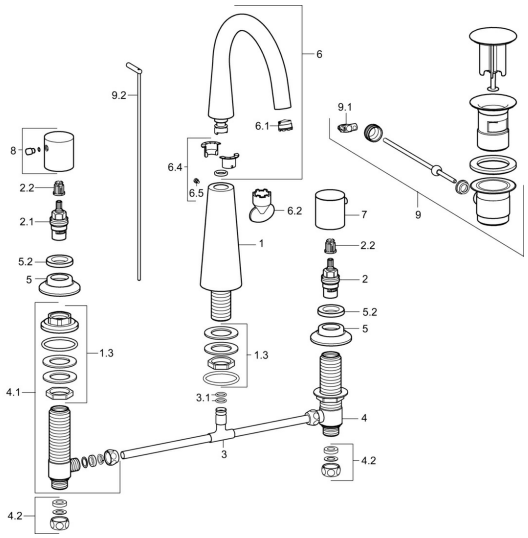

EAN: 4015474172807
static.hansa.com/51052173

Spare parts

SP51052173

	Name	Code
1.3	Screw sleeve Discontinued	59913454
2	Headpart, G1/2	59913457
2.1	Headpart, G1/2, SW17	59913224
2.2	Adapter White	59910235
3	T-connector	59910687
3.1	O-ring, d 11x2 Discontinued	59910686
4	Valve, G1/2xG1/2 Discontinued	59913453
4.1	Valve, G1/2xG1/2 Discontinued	59913455
4.2	Sealing kit Discontinued	59910707
5	Cover flange, d 55 mm Chrome	59913443
5.2	Tightening nut, d35.5xM24x1	59912023
6	Spout	59913456
6.1	Aerator, M18.5x1, TJ	59913366
6.2	Key for aerator, M18.5	59913367
6.4	Sealing kit	59911884
6.5	Screw, M4x7	59902075
7	Handle, COLD	59913337
8	Handle, HOT	59913336
9	Pop-up waste Chrome	59911441
9.1	Swivel joint	59904624
9.2	Pop-up operating rod Chrome	59913459

© 2024 Hansa Armaturen GmbH - www.hansa.com - 03.04.2024