# 44160110 HANSAVIVA - Doucheset

EAN: 4015474238848
static.hansa.com/44160110

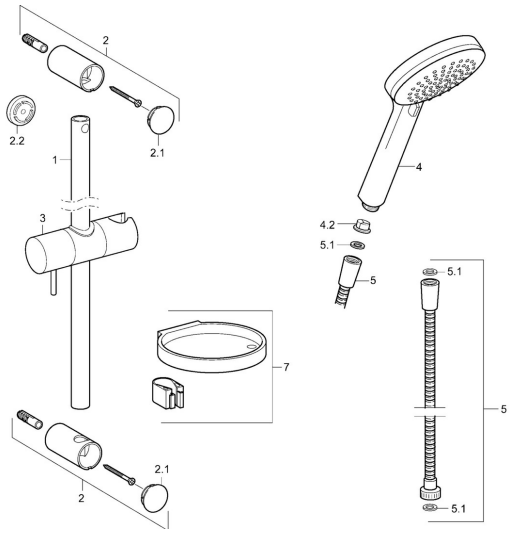


## Reserveonderdelen

### SP44160110

| | Naam | Code |
|---|---|---|
| 2 | Muurhaak Chroom | 59913743 |
| 2.1 | Kap Chroom | 59913744 |
| 2.2 | Spacer sleeve, 5 mm | 59913742 |
| 3 | Schuifstuk Chroom | 59913755 |
| 4 | Handdouche, d 100 mm Chroom Stopgezet | 44310100 |
| 4.2 | Filter sproeier | 59906859 |
| 5 | Doucheslang, L=1750 Chroom | 44120300 |
| 5.1 | Afdichtring, d 21x12x2 | 59912304 |
| 7 | Zeepschaal | 59913745 |
| 7 | Houder | 59913983 |

© 2024 Hansa Armaturen GmbH - www.hansa.com - 02.04.2024