43692100 HANSARONDA Style - Washbasin faucet

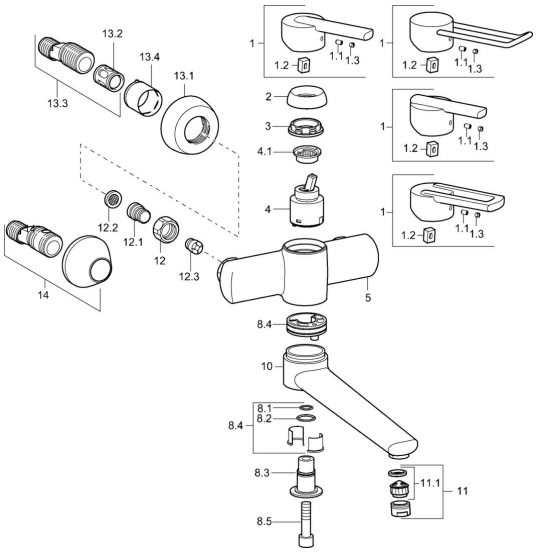

EAN: 4015474106208
static.hansa.com/43692100

Spare parts

SP43692100

	Name	Code
1	Lever Chrome Discontinued	43880003
1	Lever Chrome Discontinued	43890005
1	Lever Chrome Discontinued	59913774
1	Lever, L=138 Chrome Discontinued	59913849
1.1	Screw, M5x8, SW2.5	59904755
1.2	Bushing	59904778
1.3	Symbol plug Grey	59912112
2	Covering cap Chrome Discontinued	59912797
3	Screw, M42x1, SW34 Discontinued	59912798
4	Cartridge, 4.0 Classic	59912791
4.1	Temperature adjustment limiter Discontinued	59912799
8.1	O-ring, d 14x2 Discontinued	59904823
8.2	O-ring, 20x2	59912435
8.3	Holder Chrome Discontinued	59912819
8.4	Maintenance set Discontinued	59912818
8.5	Screw, M12x35 Discontinued	59912817
10	Spout, L=225 Chrome Discontinued	59912822
10	Spout, L=85 Chrome Discontinued	59912820
11	Aerator, M24x1 STD HC A Chrome	59902366
11.1	Aerator, M22/24 A	59902081
12	Connection nut, G3/4, AF30	59902230
12.1	Nipple	59911075
12.2	Filter sealing, G3/4	59911076
12.3	Non-return valve	59905714
13.1	Cover flange Chrome	59912652
13.2	Silencer	59904792
13.3	Eccentric connector, G3/4xG1/2, DN15	59910254
13.4	Cover sleeve Chrome	59912651
14	Eccentric coupling with stop valves and cover plates, G1/2xG3/4 Chrome	59902034
N.I.	Key, SW30/34	59912108

© 2024 Hansa Armaturen GmbH - www.hansa.com - 03.04.2024