01232274 HANSADISC - Kitchen faucet

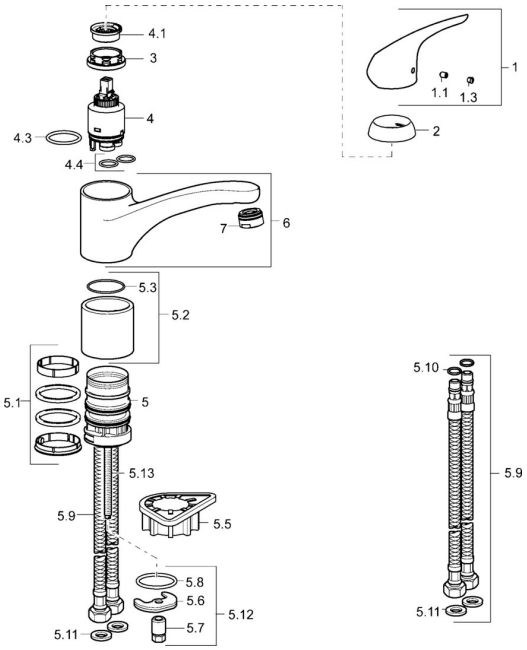

EAN: 4015474261297
static.hansa.com/01232274

Spare parts

SP01232274

	Name	Code
1	Lever Chrome Discontinued	59913979
1.1	Screw, M5x8, SW2.5	59904755
1.3	Symbol plug Grey	59912112
2	Covering cap, 33x3 mm Chrome	59912504
3	Tightening nut, M37x1, AF30 Discontinued	59912111
4	Cartridge, 3.5 Eco	59912324
4	Cartridge, 3.5 Classic	59913075
4.1	Temperature adjustment limiter	59912325
4.3	O-ring, d 28.24x2.62 Discontinued	59912590
4.4	O-ring, d 10.10x1.60 Discontinued	59905072
5.1	Sealing kit	1001264V
5.1	Sealing kit Discontinued	59913968
5.2	Raising sockel Discontinued	59913980
5.3	O-ring, d 34x1.5	59913975
5.5	Supporting plate	59910008
5.6	Fixing plate	59904765
5.7	Screw, M8x1, SW13	59904766
5.8	O-ring, d 36.09x d 3.53	59913396
5.9	Flexible pipe, L=550, G3/8-M8x1	59913969
5.10	O-ring, 6x1.4	59913266
5.11	Gasket, 9.5x14.4x2	59912551
5.12	Fixing set	59910749
5.13	Fixing screw, M8x1, L=140	59912474
6	Swivel spout with ejector Chrome Discontinued	59913981
7	Aerator, M24x1 STD HC A Chrome	59902366
N.I.	Key, SW30/34	59912108
N.I.	Washer set Discontinued	59914043

© 2024 Hansa Armaturen GmbH - www.hansa.com - 03.04.2024