8113956233 HANSALIVING - Cover part for shower faucet

EAN: 4057304015830
static.hansa.com/8113956233

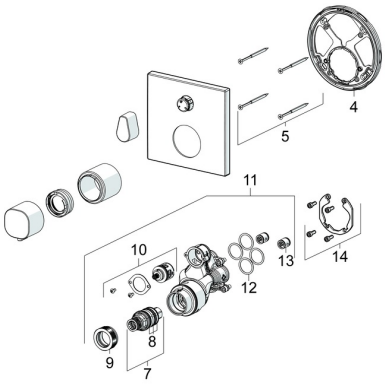

Spare parts

SP8113956233

	Name	Code
04	Fixing part	59914307
05	Screw, M4.5x80	59912890
07	Thermostatic cartridge, 3.4	59914114
08	O-ring kit	59914113
09	Tightening nut, M36x1.5, SW38	59914319
10	Diverter	59914183
11	Functional unit, (8114, 8862)	59914311
11	Functional unit, (8113, 8861)	59914316
12	O-ring, 23.47x2.62	59914304
13	Non-return valve	59905714
14	Installation kit	59914186
N.I.	Raising kit, 15 mm	59914182
N.I.	Adapter, H/C reversed	59914184

© 2024 Hansa Armaturen GmbH - www.hansa.com - 19.04.2024