81119563 HANSADESIGNO Style - Cover part for bath and shower faucet

EAN: 4057304006760
static.hansa.com/81119563

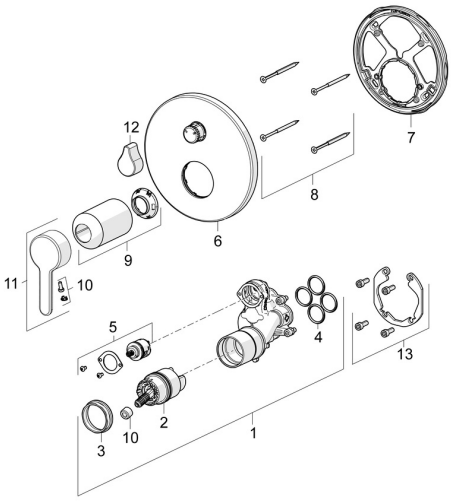

Spare parts

SP81119563

	Name	Code
01	Functional unit	59914514
02	Cartridge, 4.0 Classic	59914129
03	Tightening nut, M42x1.5, SW 38	59914128
04	O-ring, 23.47x2.62	59914304
05	Diverter	59914183
06	Cover flange, d 170 mm Chrome	59914308
07	Fixing part	59914307
08	Screw, M4.5x80	59912890
09	Cover sleeve Chrome	59914572
10	Symbol plug	59914573
11	Lever Chrome	59914574
12	Handle Chrome	59914576
13	Installation kit	59914186
N.I.	Adapter, H/C reversed	59914184
N.I.	Raising kit, 15 mm	59914182
N.I.	Fixing screw, M6x13	59914657
N.I.	Diverter, 120°	59914655
N.I.	Raising kit, 15 mm, d 170 mm	59914191

© 2024 Hansa Armaturen GmbH - www.hansa.com - 16.04.2024