80812101 HANSAELECTRA - Cover part for washbasin faucet, 12 V

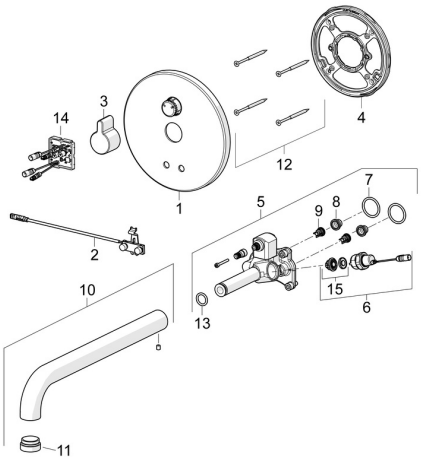

EAN: 4057304008528
static.hansa.com/80812101

Spare parts

SP80812101

	Name	Code
01	Cover plate, d 170 mm Chrome	59914553
02	Sensor	59914647
03	Handle Chrome	59914322
04	Fixing part Discontinued	59914554
05	Functional unit	59914555
06	Solenoid valve complete, 3 V	59914125
07	O-ring, 23.47x2.62	59914304
08	Litter filters	59914085
09	Non-return valve, DN8	59914030
10	Spout, L=170 Chrome	59914547
11	Aerator, M24x1, -105	59914550
12	Screw, M4.5x80	59912890
13	O-ring, d 13.1x2.62	59914551
14	Control unit, 12 V	59914560
15	Membrane for solenoid valve	1006500V
15	Membrane Discontinued	59914126

© 2024 Hansa Armaturen GmbH - www.hansa.com - 20.03.2024