52502100 HANSA - Spout, L=170

EAN: 4015474068445
static.hansa.com/52502100

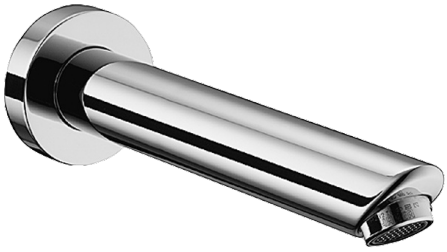

- Bathtub & Shower
- Accessories
- Wall mounted
- Chrome
- Fixed spout, Casted construction
- Standard aerator
- External thread
- Flexible length / can be shortened, Inner body made of DZR brass

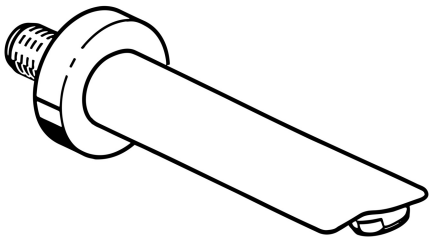

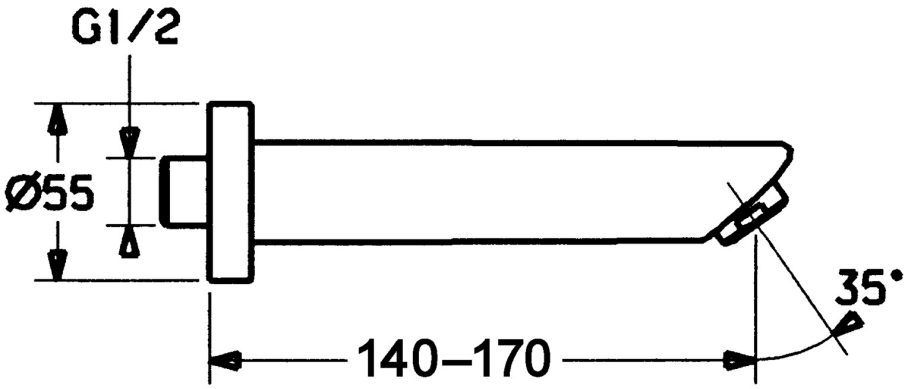

Technical data

Technical properties

DN-size (nominal dimension)	**DN15**
Connection size	**G1/2**
Projection	**170 mm**
Material	**Brass**

Spare parts

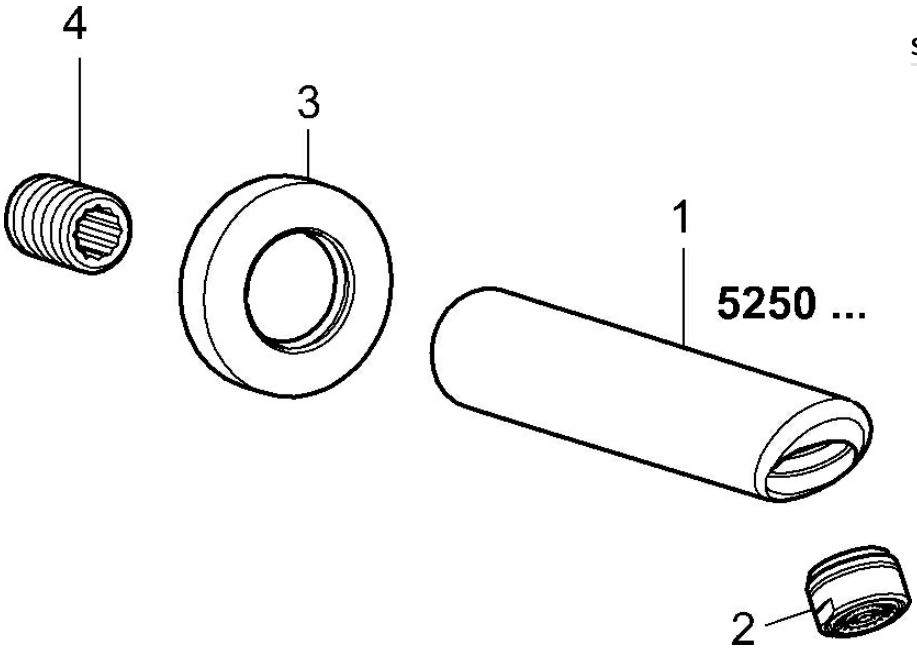

SP52502100

	Name	Code
2	Aerator, M24x1 B	59905872
3	Flange	59912512
4	Nipple	59905534