45073283 HANSAPINTO - Bidet faucet

EAN: 4057304003097
static.hansa.com/45073283

- Bidet
- Single-lever
- Deck mounted
- Chrome
- Fixed spout
- PCA® - constant flow rate regardless of pressure variations, Ball joint, Standard aerator
- Hot/Cold symbols, Single operating lever/handle
- Pop-up waste with draw-rod
- Limitation option for maximum temperature and flow-rate, Adjustable hot water stop (included, retrofittable)
- ø 40 mm ceramic cartridge for flow and temperature control
- Flexible inlet pipes
- 3S-installation system for safe and simple mounting, Inner body made of DZR brass

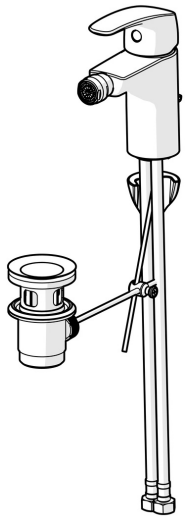

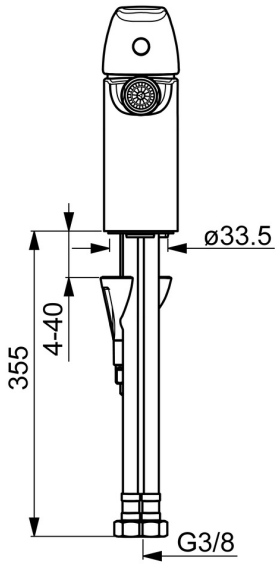

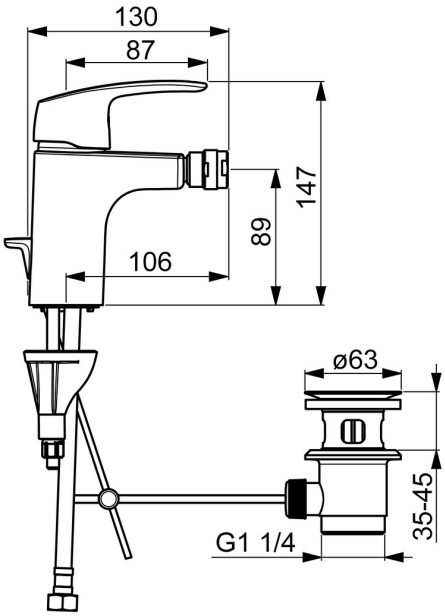

Technical data

Flow properties

Flow-rate at 3 bar (with flow controller)	**6.0 l/min**

Technical properties

DN-size (nominal dimension)	**DN15**
Hot water supply	**max. +70°C**
Working pressure	**0.5-10 bar**
Connection size	**G3/8**
Projection	**106 mm**
Backflow prevention (EN1717)	**AA**
Material	**Brass**

Regulations

EN standard	**EN 817**
Noise class	**I (ISO 3822)**

Approvals and Declarations

KIWA	**K6116/08**
DVGW	**DW-6506CS0580**
ABP	**P-IX 29684/IA**

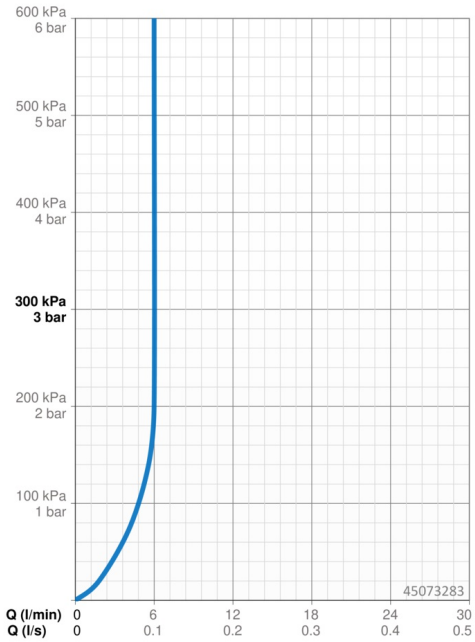

Spare parts

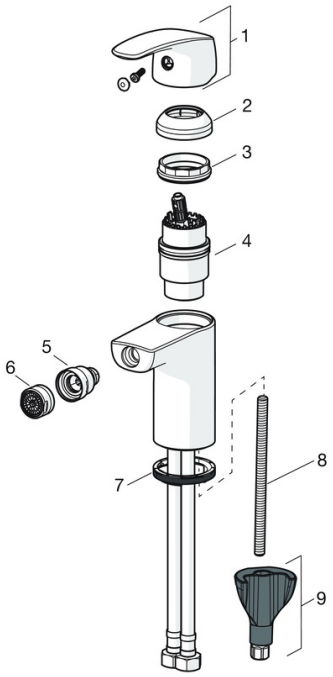

SP45073283

	Name	Code
01	Lever	59914453
02	Covering cap	59914478
03	Tightening nut, M42x1.5, SW 38	59914128
04	Cartridge, 4.0 Classic	59914129
05	Ball joint for bidet faucet	59910952
06	Aerator, M24x1, 6 l/min	59914476
07	Bottom seal	59914591
08	Fixing screw, M8x1, L=130	59914474
09	Fixing set	59914475
N.I.	Pop-up waste, (2019-)	59914764

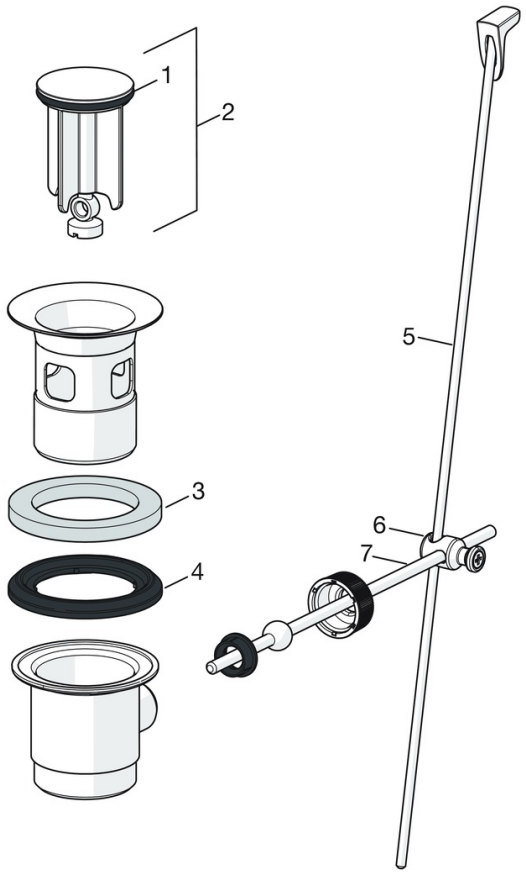

SP0034D

	Name	Code
01	Gasket, 57x8.5x1.5	59911456
02	Plug for pop-up waste, d 63 mm	59902021
03	O-ring	59905077
04	Form sealing	59905078
05	Pop-up operating rod	59914477
06	Swivel joint	59904624
07	Lever for pop-up waste	59904622

© 2024 Hansa Armaturen GmbH - www.hansa.com - 16.04.2024