402922030061 HANSATWEN - Washbasin faucet

EAN: 4057304001055
static.hansa.com/402922030061

- Washbasin
- Single-lever, side operated
- Deck mounted
- Chrome
- Swivel spout, Swivel range limiting option
- PCA® - constant flow rate regardless of pressure variations
- Hot/Cold symbols, Single operating lever/handle
- Limitation option for maximum temperature and flow-rate, Adjustable hot water stop (included, retrofittable)
- ø 35 mm ceramic cartridge for flow and temperature control
- Flexible inlet pipes
- Inner body made of DZR brass, Rapid installation system
- Without pop-up waste, Without draw-rod opening

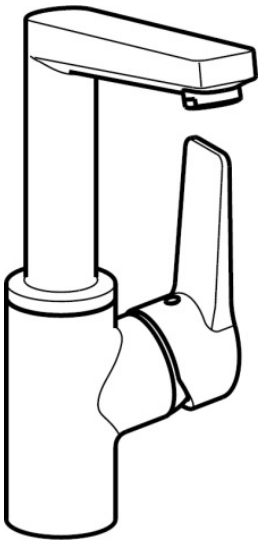

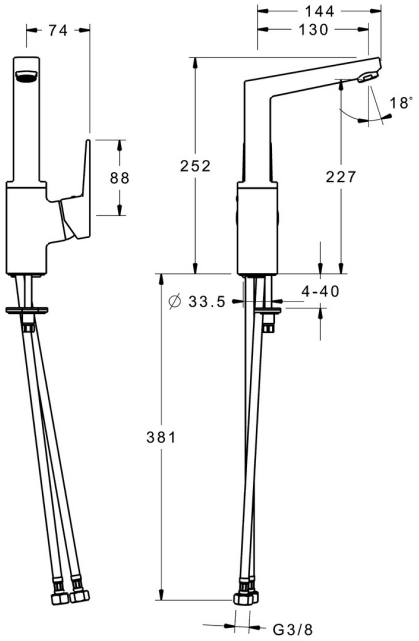

Technical data

Flow properties

Flow-rate at 3 bar (with flow controller)	**6.0 l/min**

Technical properties

DN-size (nominal dimension)	**DN15**
Hot water supply	**max. +80°C**
Working pressure	**0.5-10 bar**
Connection size	**G3/8**
Projection	**130 mm**
Backflow prevention (EN1717)	**AA**
Material	**Brass**

Regulations
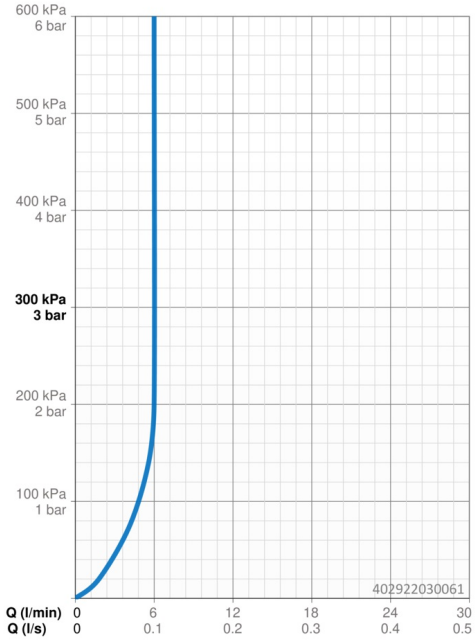
EN standard	**EN 817**