09121183 HANSATWIST Protec - Kitchen faucet, low pressure

EAN: 4015474261143
static.hansa.com/09121183

- Kitchen
- Single-lever, Low pressure
- Deck mounted
- Chrome
- Swivel spout
- Laminar stream, Standard aerator
- Hot/Cold symbols, Single operating lever/handle
- Limitation option for maximum temperature and flow-rate, Adjustable hot water stop (included, retrofittable)
- ø 35 mm ceramic cartridge for flow and temperature control
- Copper inlet pipes
- Surfaces in contact with drinking water contain less than 0.3% lead, Inner body made of DZR brass, Waterways without nickel coating, Rapid installation system

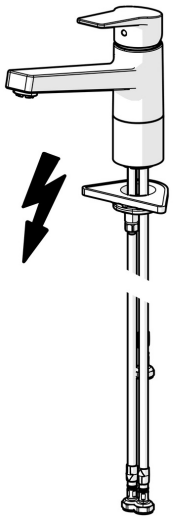

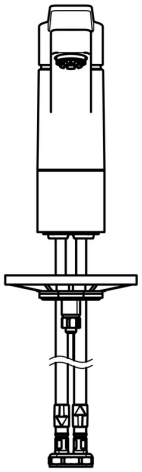

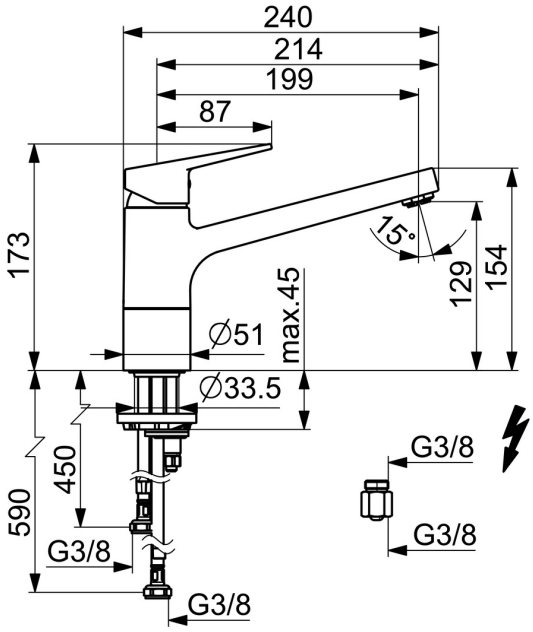

Technical data

Flow properties

Flow-rate at 3 bar	**7.2 l/min**

Technical properties

DN-size (nominal dimension)	**DN15**
Hot water supply	**max. +80°C**
Working pressure	**0.5-5 bar**
Connection size	**G3/8**
Projection	**199 mm**
Backflow prevention (EN1717)	**AA**
Material	**Brass**

Regulations

EN standard	**EN 817**
Noise class	**I (ISO 3822)**

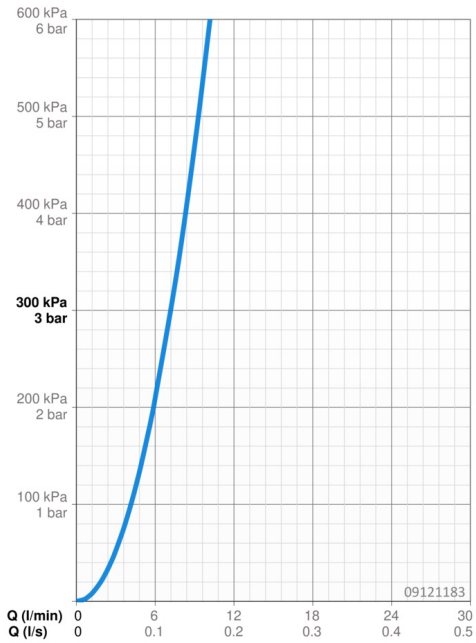

Spare parts

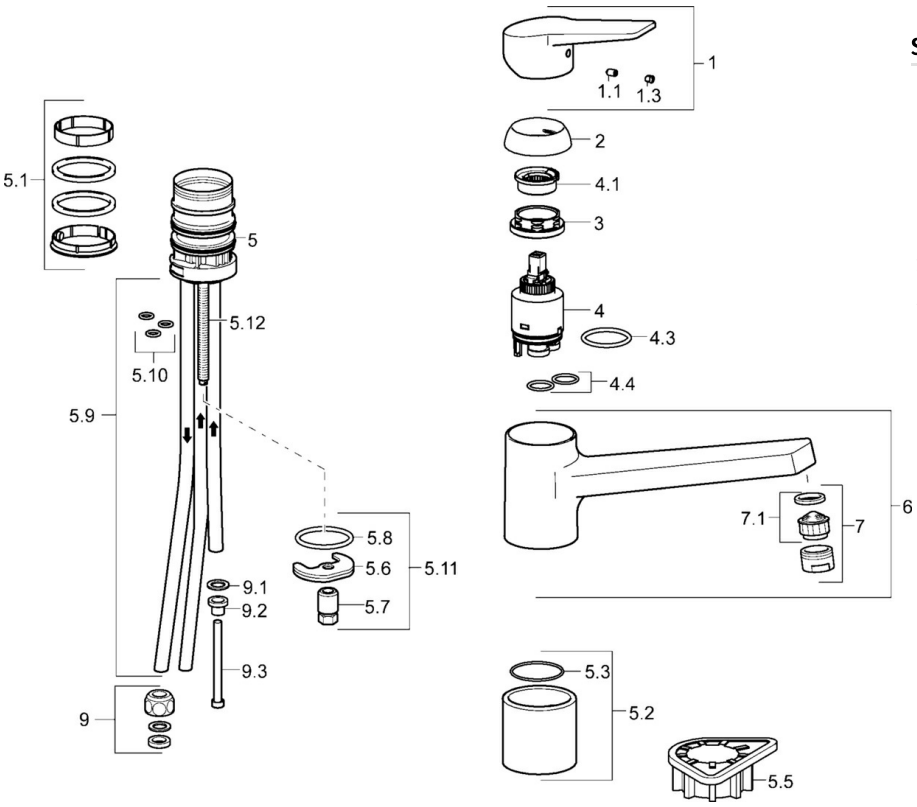

SP09121183

	Name	Code
1	Lever	59913910
1	Lever	59913911
1.1	Screw, M5x8, SW2.5	59904755
1.3	Symbol plug Grey	59912112
2	Covering cap, 33x3 mm	59912504
3	Tightening nut, M37x1, AF30 Discontinued	59912111
4	Cartridge, 3.5 Eco	59912324
4	Cartridge, 3.5 Classic	59913075
4.1	Temperature adjustment limiter	59912325
4.3	O-ring, d 28.24x2.62 Discontinued	59912590
4.4	O-ring, d 10.10x1.60 Discontinued	59905072
5.1	Sealing kit	1001264V
5.1	Sealing kit Discontinued	59913968
5.2	Raising sockel Discontinued	59913980
5.3	O-ring, d 34x1.5	59913975
5.5	Supporting plate	59910008
5.6	Fixing plate	59904765
5.7	Screw, M8x1, SW13	59904766
5.8	O-ring, d 36.09x d 3.53	59913396
5.9	Pipe, M8x1, L=560	59912806
5.10	O-ring, 6x1.4	59913266
5.11	Fixing set	59910749
5.12	Fixing screw, M8x1, L=140	59912474
6	Spout	59913978
7	Aerator, M24x1 A, low pressure	59902692
7.1	Aerator, M22/24, ND	59901553
9	Fitting nut	59904969
9.1	Sealing kit, 14.9x8.5x1	59902352
9.2	Sealing kit, 10x8	59902272
9.3	Hose	59902151
N.I.	Key, SW30/34	59912108
N.I.	Washer set Discontinued	59914043

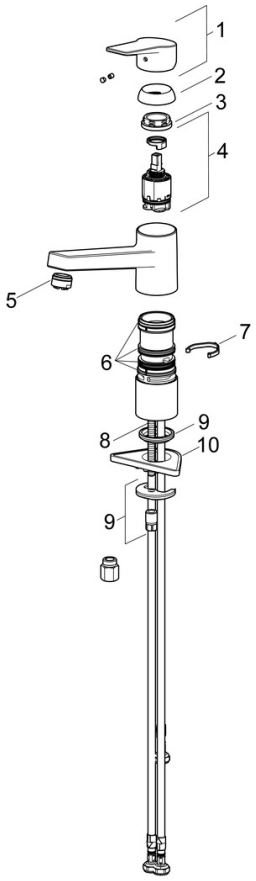

SP09121183(2020)

	Name	Code
01	Lever	59913910
01	Lever	59913911
02	Covering cap, 33x3 mm	59912504
03	Tightening nut, M37x1, SW30	1005680V
04	Cartridge, 3.5 Classic	59913075
05	Aerator, M24x1 A, low pressure	59902692
06	Sealing kit	1001264V
07	Spout overturning stopper, 120°	59914489
08	Fixing screw, M8x1, L=140	59912474
09	Fixing set	59910749
10	Supporting plate	59910008