0787910182 HANSAVIVA - Cover part for shower faucet Discontinued

EAN: 4015474656208
static.hansa.com/0787910182

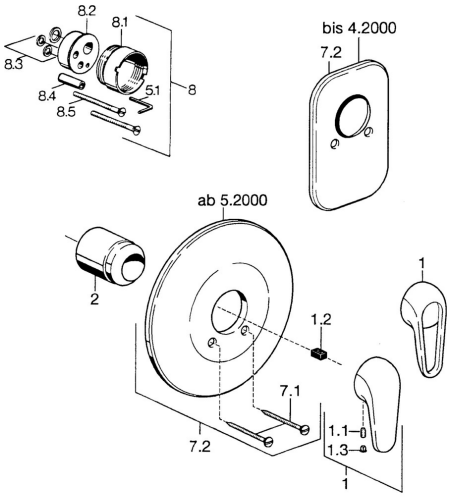

- Shower solutions
- Trim Kit
- Concealed wall mounting
- White

Technical data

Technical properties

Hot water supply	**max. +80°C**
Working pressure	**0.5-10 bar**

Spare parts

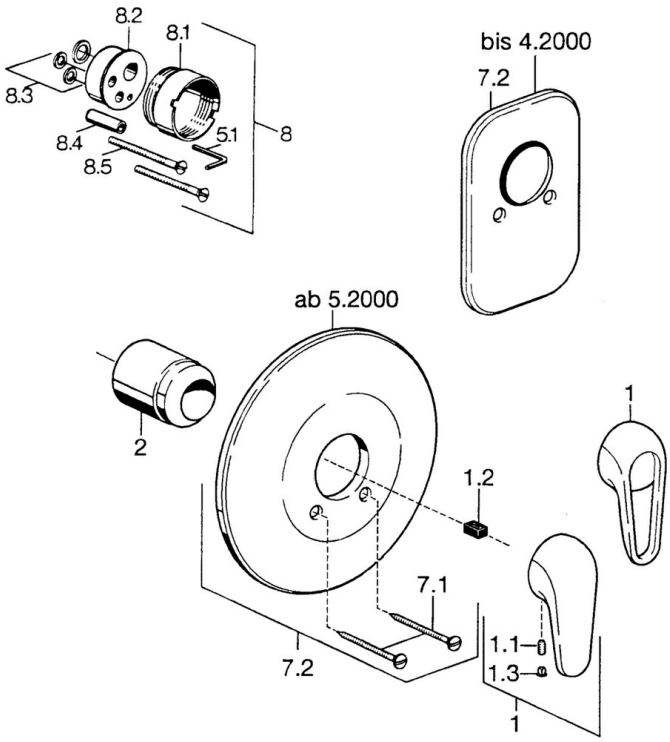

SP07879100

	Name	Code
2	Covering cap	59904820
7.1	Screw, M5x65	59904847
7.1	Screw, M5x65 White Discontinued	59906672
7.2	Cover flange Discontinued	59911012
7.2	Cover flange, d 205 mm	59911969

© 2024 Hansa Armaturen GmbH - www.hansa.com - 03.04.2024