0584310072 HANSA - Spout Discontinued

EAN: 4015474587977
static.hansa.com/0584310072

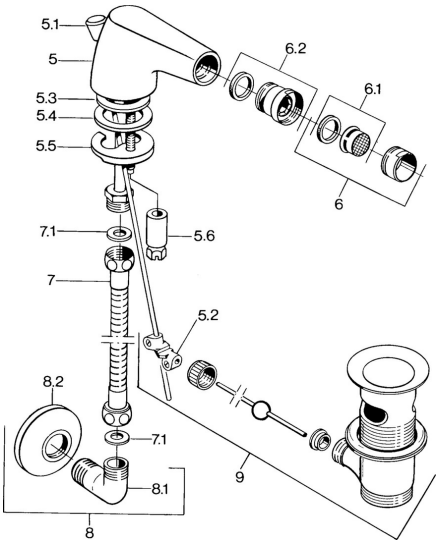

- Accessories

Technical data

Spare parts

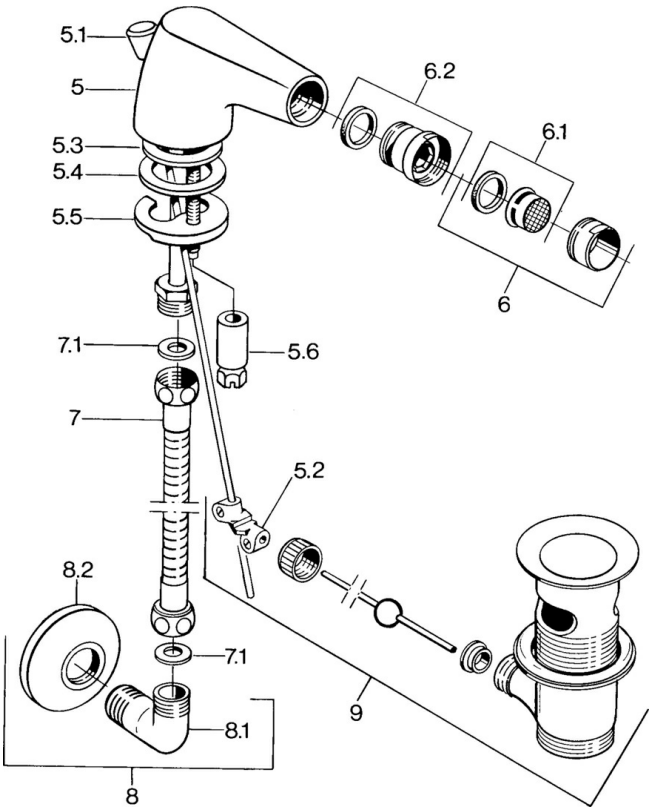

SP058431000050

	Name	Code
5.2	Swivel joint	59904624
5.3	O-ring, 42x3.5	59904764
5.4	Gasket, 48x33.5x2	59902283
5.5	Fixing plate	59904765
5.6	Screw, M8x1, SW13	59904766
6	Aerator, M24x1 STD CC A Edelmessing Discontinued	59906580
6	Aerator, M24x1 STD HC A	59902366
6	Aerator, M24x1 A White Discontinued	59905419
6.1	Aerator, M22/24 A	59902081
6.2	Ball joint for bidet faucet, M24x1	59904920
7	Hose, L=400 Discontinued	59902584
7.1	Gasket, 18.5x12.2x1.5	59902313
9	Pop-up waste Edelmessing Discontinued	59906734
9	Pop-up waste	59904620

© 2024 Hansa Armaturen GmbH - www.hansa.com - 14.02.2024