0442010084 HANSA - Wall coupling for shower hose Discontinued

EAN: 4015474672376
static.hansa.com/0442010084

- Shower solutions
- Accessories
- Wall mounted
- Black
- Wall connection elbow
- Non-return valve(s)

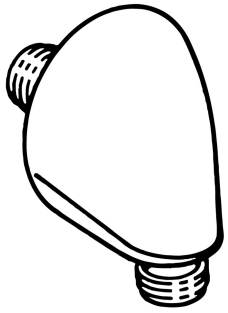

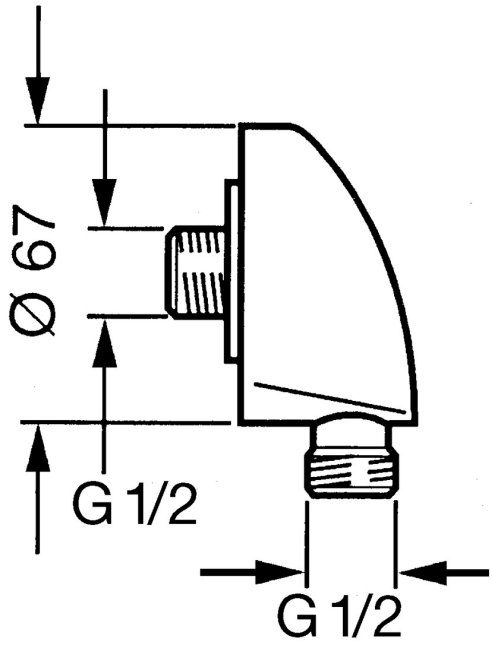

Technical data

Technical properties

DN-size (nominal dimension)	**DN15**
Hot water supply	**max. +80°C**
Working pressure	**0.5-10 bar**
Connection size	**G1/2**
Backflow prevention (EN1717)	**EB**

Spare parts

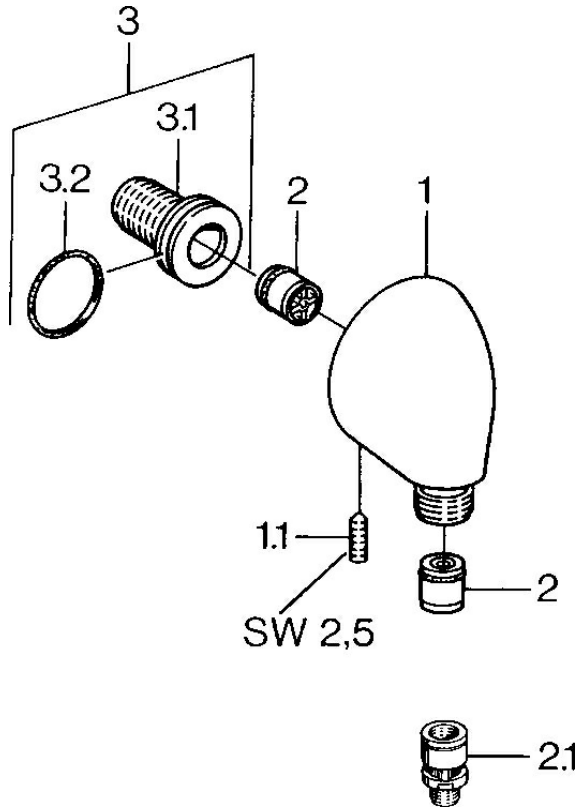

SP04420100

	Name	Code
1.1	Screw, M6x20	59911228
2	Non-return valve	59905714
2.1	Vacuum breaker, DN15	59911330
3	Connection nipple, G1/2	59911229
3.2	O-ring, d 25x2.5	59905053