0367010072 HANSARONDA - Shower faucet Discontinued

EAN: 4015474679832
static.hansa.com/0367010072

- Shower solutions
- Single-lever
- Wall mounted
- Single operating lever/handle, Hot/Cold symbols
- Limitation option for maximum temperature and flow-rate, Adjustable hot water stop (included, retrofittable)
- ø 48 mm ceramic eco cartridge for flow and temperature control, Non-return valve(s)
- Without operation lever

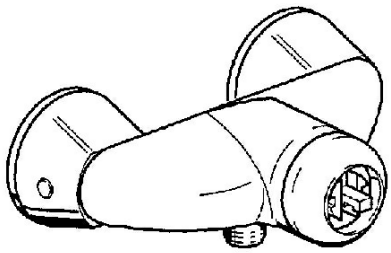

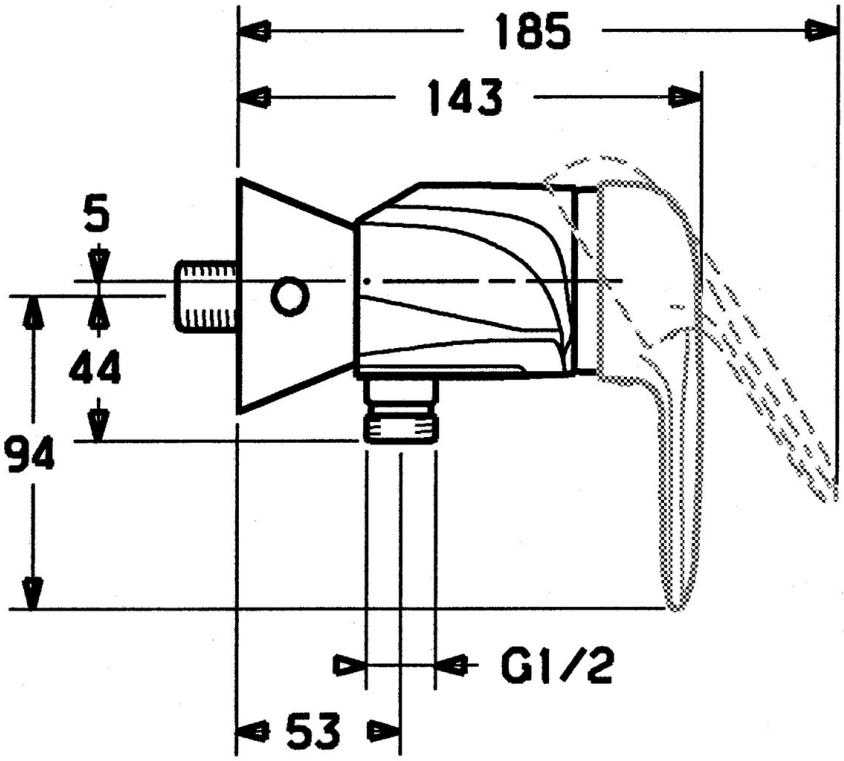

Technical data

Technical properties

Hot water supply	**max. +80°C**
Working pressure	**0.5-10 bar**
Backflow prevention (EN1717)	**EB**

Regulations

EN standard	**EN 817**

Spare parts

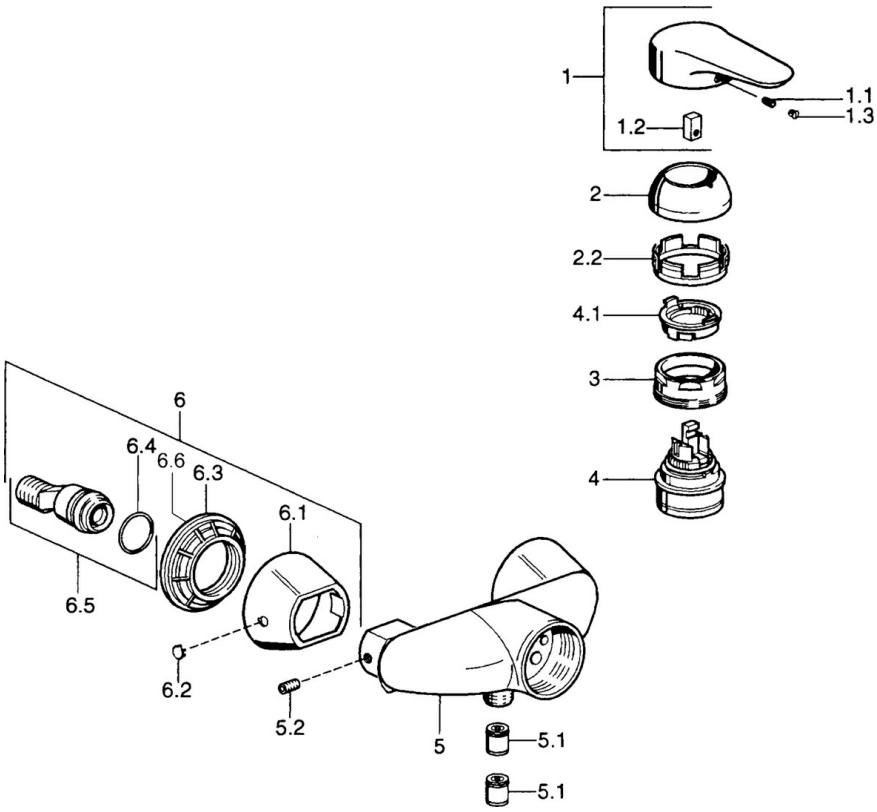

SP03670102

	Name	Code
1	Lever, 99 mm, red/blue Discontinued	59913769
1	Lever Discontinued	59913771
1	Lever, L=99 mm, (-2011)	59913768
1	Lever, L=138 mm Discontinued	59913770
1.1	Screw, M5x8, SW2.5	59904755
1.2	Bushing	59904778
1.3	Plug, hot/cold	59906705
2	Covering cap	59906563
2	Covering cap Chrome/Satin Discontinued	59906564
2.2	Fixing sleeve	59906695
3	Eye screw, M50x1, SW45	59904775
4	Cartridge, 4.8 eco	59904601
4.1	Hot water limiter	59904759
5.1	Non-return valve	59905714
5.2	Screw, M8x8	59906104
6.1	Cover flange Discontinued	59911473
6.2	Plug Discontinued	59911480
6.3	Adapter Discontinued	59911486
6.4	O-ring, 25.07x2.62	59911479
6.5	Connector, G1/2	59911491
N.I.	Vacuum breaker, DN15	59911330