01506196 HANSACLINICA - Washbasin faucet

Discontinued

EAN: 4015474030022
static.hansa.com/01506196

- Health & Care
- Single-lever
- Deck mounted
- Chrome
- Fixed spout
- Loop shape, Hot/Cold symbols, Single operating lever/handle
- Copper inlet pipes
- Without pop-up waste

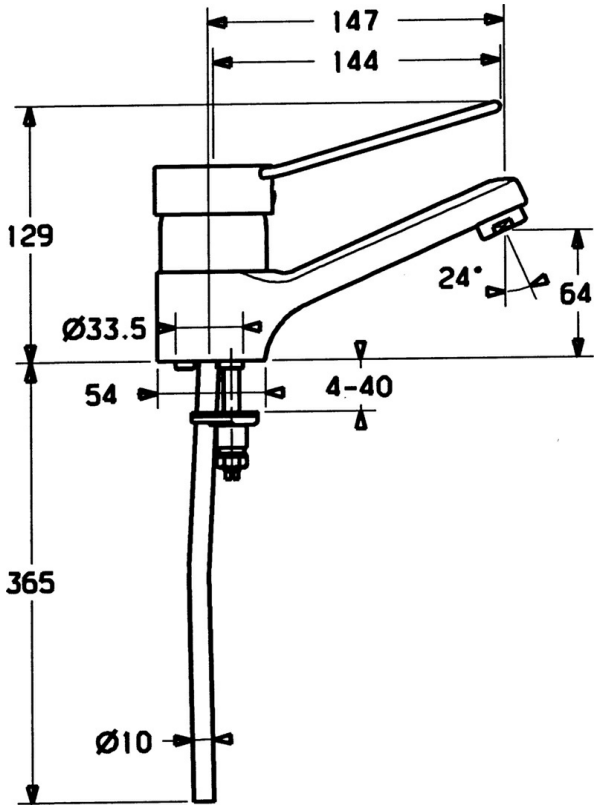

Technical data

Technical properties

DN-size (nominal dimension)	**DN15**
Hot water supply	**max. +80°C**
Working pressure	**0.5-10 bar**
Connection size	**Ø10**
Projection	**147 mm**
Material	**Brass**

Regulations

EN standard	**EN 817**

© 2024 Hansa Armaturen GmbH - www.hansa.com - 03.04.2024

Spare parts

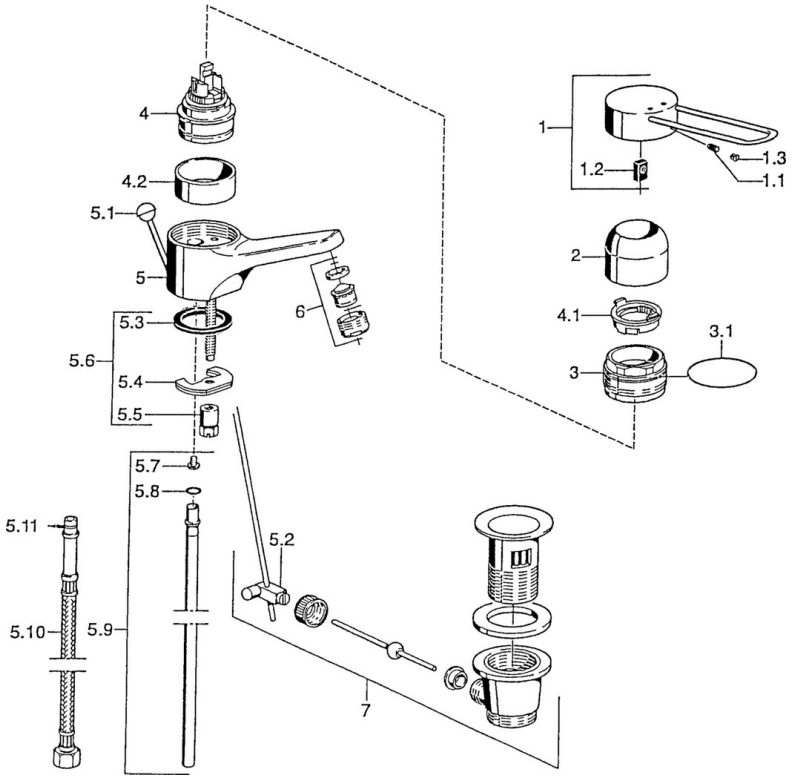

SP01506106

	Name	Code
1	Lever Discontinued	599015806
1.1	Screw, M5x8, SW2.5	59904755
1.2	Bushing	59904778
2	Covering cap	59911160
3	Tightening nut, M52x1, AF45	59911161
3.1	O-ring, d 39x2.5 Discontinued	59911162
4	Cartridge, 4.8 eco	59904601
4.1	Hot water limiter	59904759
4.2	Spacer sleeve Discontinued	59905871
5.2	Swivel joint	59904624
5.3	Gasket, 37x48x3.5	59911422
5.4	Fixing plate	59904765
5.5	Screw, M8x1, SW13	59904766
5.6	Fixing set	59910749
5.7	Attachment clamp Discontinued	59911416
5.8	O-ring, 9x2	59905095
5.9	Pipe, d 10 mm, L=413	59911423
5.10	Flexible pipe, L=370, G3/8 Discontinued	59911626
5.11	O-ring, d 6.75x1.78	59902351
6	Aerator, M24x1, 7 l/min (-2013) Discontinued	59912004
7	Pop-up waste	59904620