01152273 HANSAMIX - Kitchen faucet with dishwasher valve

Discontinued

EAN: 4015474259218
static.hansa.com/01152273

- Kitchen
- Single-lever, Dishwasher valve
- Deck mounted
- Chrome
- Mechanic stop valve for external equipment
- Single operating lever/handle, Hot/Cold symbols
- Limitation option for maximum temperature and flow-rate, Adjustable hot water stop (included, retrofittable)
- ø 48 mm ceramic eco cartridge for flow and temperature control
- Flexible inlet pipes
- Surfaces in contact with drinking water contain less than 0.3% lead, Inner body made of DZR brass, Waterways without nickel coating

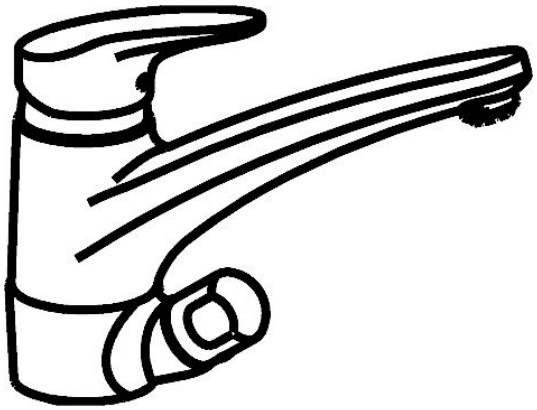

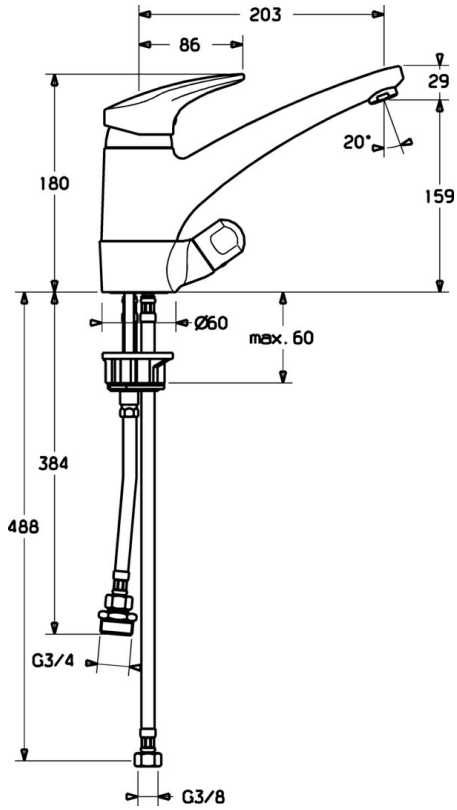

Technical data

Technical properties

DN-size (nominal dimension)	**DN15**
Hot water supply	**max. +70°C**
Working pressure	**0.5-10 bar**
Connection size	**G3/8**
Material	**Brass**

Regulations

EN standard	**EN 817**

Spare parts

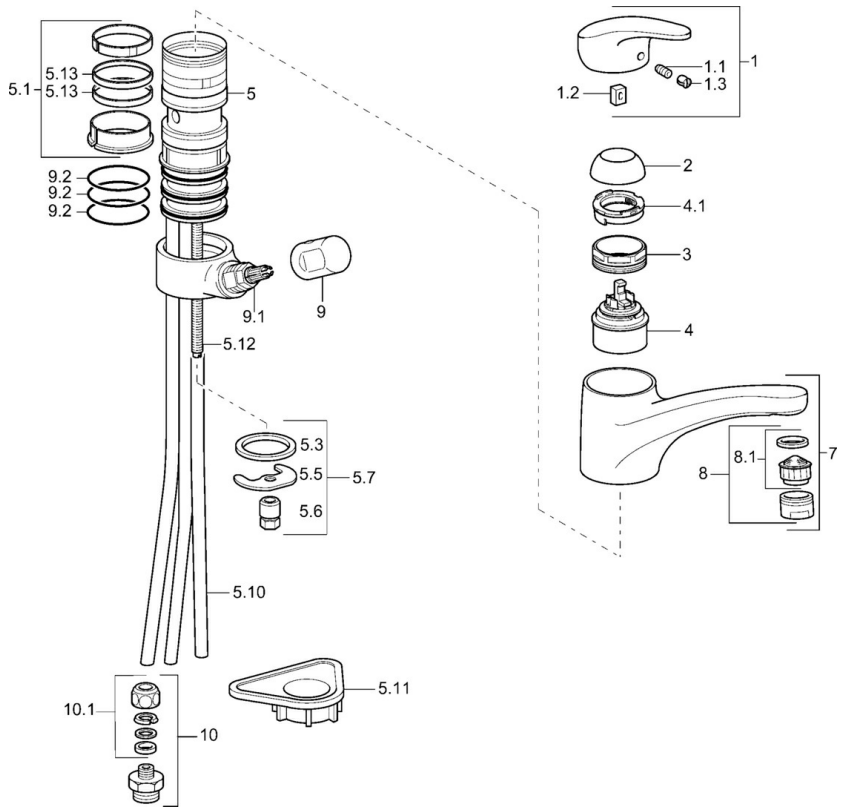

SP01152173

	Name	Code
1	Lever, L=87 mm	59914195
1.1	Screw, M5x8, SW2.5	59904755
1.2	Bushing	59904778
1.3	Symbol plug Grey	59912112
2	Covering cap Mocha Discontinued	5991264787
2	Covering cap	59912647
3	Fixing screw, M50x1, SW45	59904890
4	Cartridge, 4.8 eco	59904601
4.1	Hot water limiter	59904759
5.1	Sealing kit	59912646
5.3	Gasket, 37x48x3.5	59911422
5.5	Fixing plate	59904765
5.6	Screw, M8x1, SW13	59904766
5.7	Fixing set	59910749
5.10	Pipe, d 10 mm, L=413	59911423
5.10	Flexible pipe, L=500, G3/8-M10x1	59911767
5.11	Supporting plate	59910008
5.12	Fixing screw, M8x1, L=140	59912474
5.13	Gasket, 40.3x6	59911387
7	Spout White Discontinued	5991271182
7	Spout	59912711
8	Aerator, M24x1 STD HC A	59902366
8	Aerator, M24x1 A (2011-)	59913740
8	Aerator, M24x1 A White Discontinued	59905419
8	Aerator, M24x1 Mocha Discontinued	59904998
8.1	Aerator, M22/24 A	59902081
9	Handle	59910370
9.1	Headpart, G1/2	59913457
9.2	O-ring, d 45x2.5	59911151
10	Connector nipple, G3/4xG3/8	59910940
10.1	Nipple Discontinued	59910377

© 2024 Hansa Armaturen GmbH - www.hansa.com - 03.04.2024