00870019 HANSAELECTRA - Washbasin faucet, 3 V, Bluetooth

EAN: 4057304015885
static.hansa.com/00870019

- Public & Semi-public, Health & Care
- Touchless, Battery-operated, Bluetooth®
- Wall mounted
- Chrome
- Fixed spout, Casted construction
- PCA® - constant flow rate regardless of pressure variations, Laminar stream, Protection against burglary
- Non-return valve(s), Litter filter(s)
- Autofocus infrared sensor, Solenoid valve, Low battery indicator
- One inlet for cold or premixed water, External thread, with integrated shut-off valve(s)
- Software settings adjustable via App

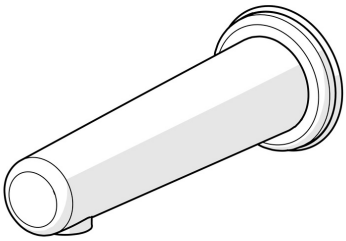

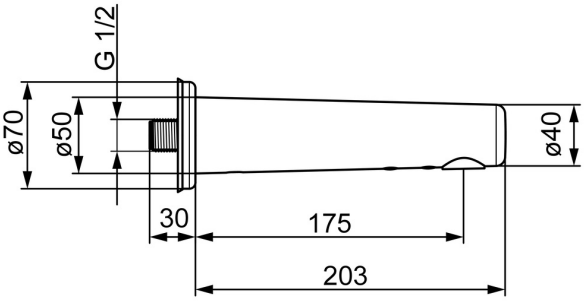

Technical data

Flow properties

Flow-rate at 3 bar (with flow controller)	**6.0 l/min**

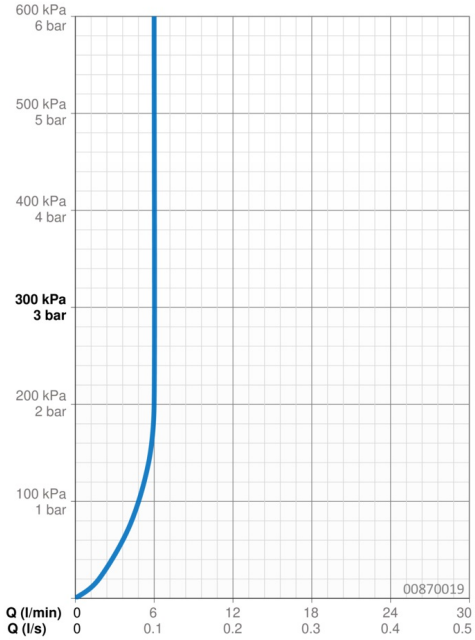

Technical properties

DN-size (nominal dimension)	**DN15**
Hot water supply	**max. +70°C**
Working pressure	**1-10 bar**
Connection size	**G1/2**
Projection	**175 mm**
Backflow prevention (EN1717)	**AA**
Material	**Brass**

Software settings

Afterflow period	**3 s (1-20 s)**
Automatic flush	**off (off/1-120 h)**
Automatic flush period	**30 s (1-1800 s)**
Max. flow period	**2 min (1 - 1800 s)**

Electronic properties

Battery	**AA 1.5 V Lithium x 2**
Bluetooth version	**4.x (D034445)**

Regulations

EU Directives	**CE Radio Equipment Directive 2014/53/EU , Low Voltage Directive 2014/35/EU , EMC Directive 2014/30/EU , RoHS Directive 2011/65/EU**
EN standard	**EN 15091, ETSI EN 301 489-1 V1.9.2 , ETSI EN 300 328 v2.2.2 , EN 61000-6-1:2007 , EN 61000-6-3:2007+A1:2011+AC:2012 , EN 60335-1:2012+A11+A13+A1+A14+A2+A15:2021, Part 19.11.4**
Noise class	**I (ISO 3822) Oras lab.**
Protection class	**IP 55**

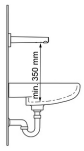

Approvals and Declarations

UN38.3	**UN38-3 Energizer L91**

Spare parts

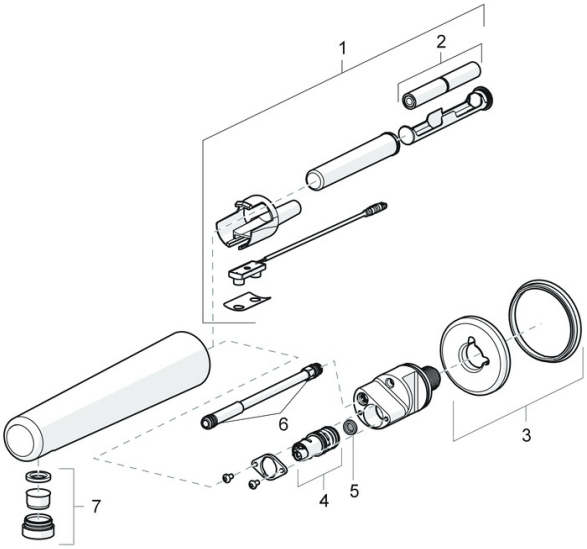

SP00870010

	Name	Code
01	Sensor, 3 V Bluetooth	1000689V
01	Sensor, 3 V Discontinued	59914387
02	Battery, 1.5 V AA Lithium	59914136
03	Cover sleeve Discontinued	59914388
04	Solenoid valve, 3 V	59914390
05	Litter filter	59914389
06	O-ring, 8.1x1.6	59914391
07	Aerator and key, M24x1, 6 l/min, Laminar	59914494
N.I.	Non-return valve, DN15	59914250